Diritti riservati All rights reserved

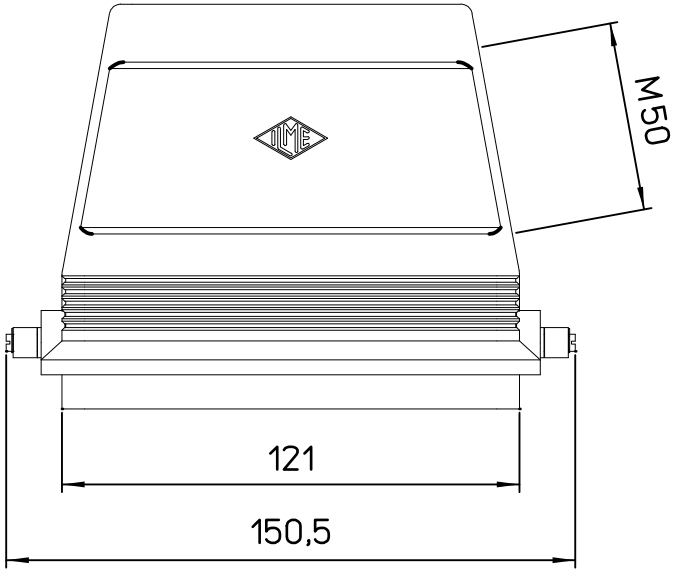

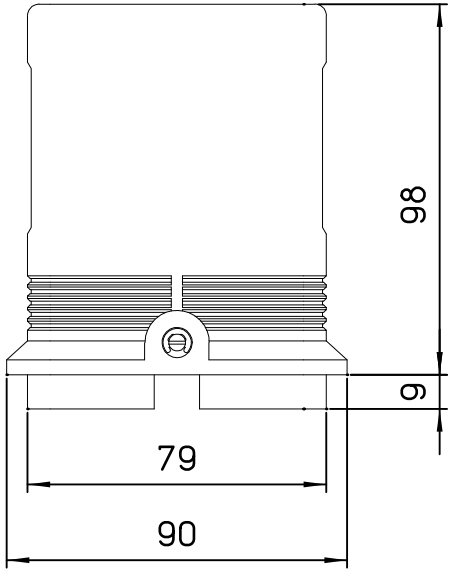

dimensions in mm	MFO 48 L50	Scale
Date 14/12/06	hood side entry M50 no adapt.	1:2
Sign.		